6147302

AVITAL®

DRINA

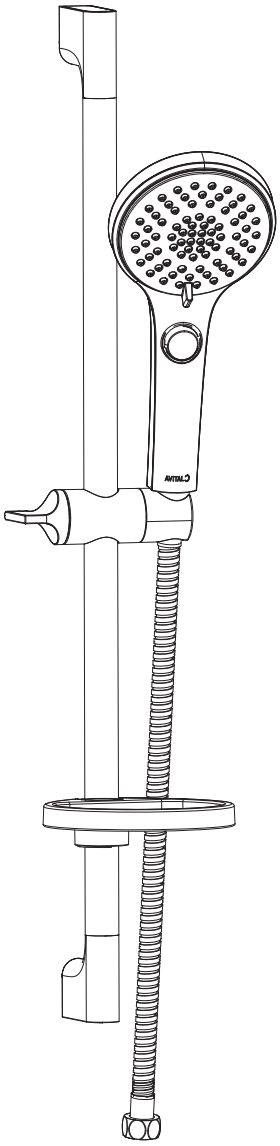

Manufactured for
HORNBACH-Baumarkt-AG
Hornbachstrasse
6147302 Bornheim/Germany

(20210519 V01)

M4x35mm

A

Ø6x30mm

B

C

D

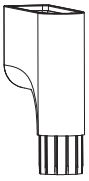

E

F

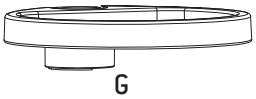

G

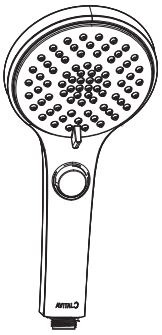

H

I

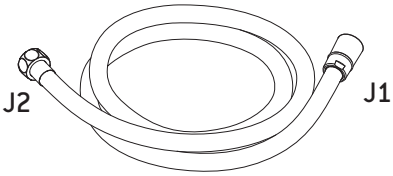

J

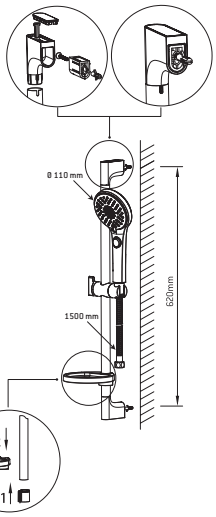

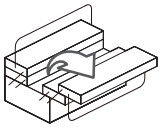

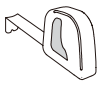

Ø6mm

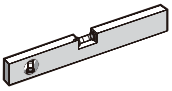

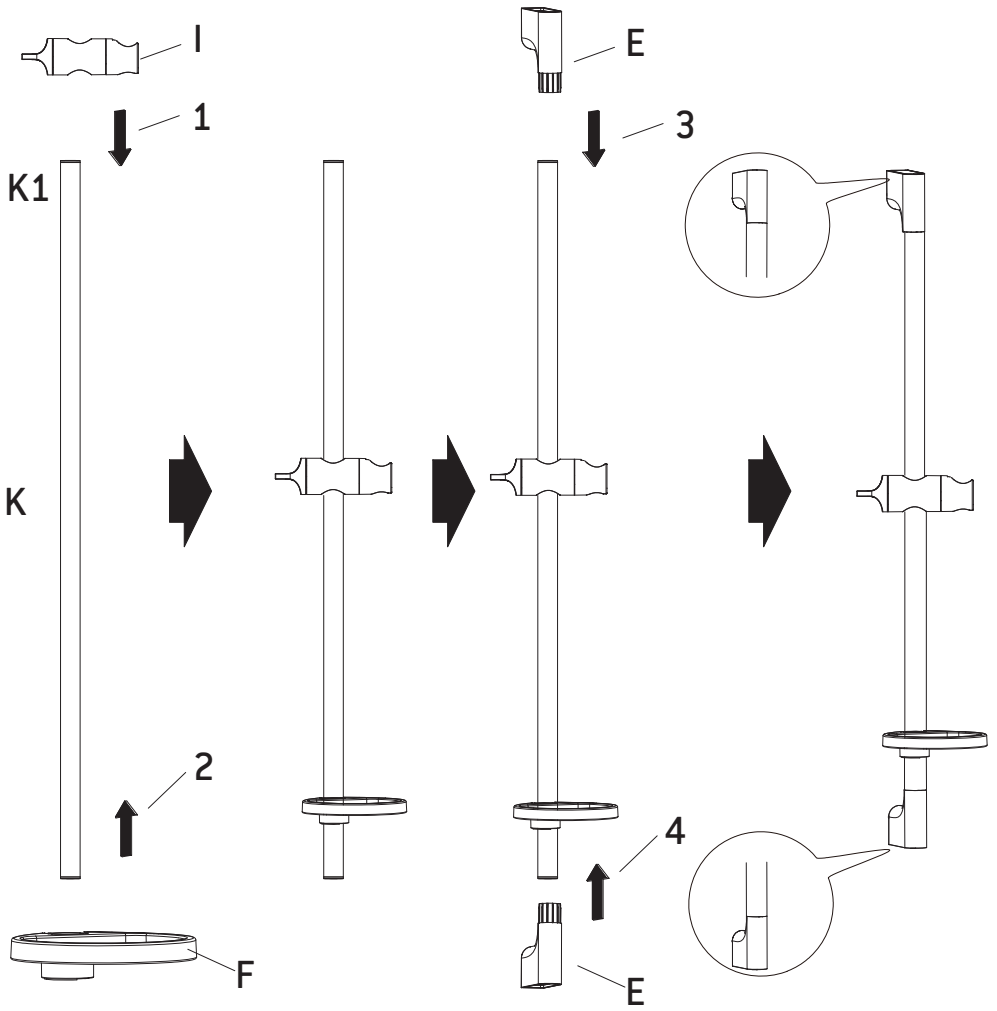
I
1
K1
K
2
F
E
3
4
E

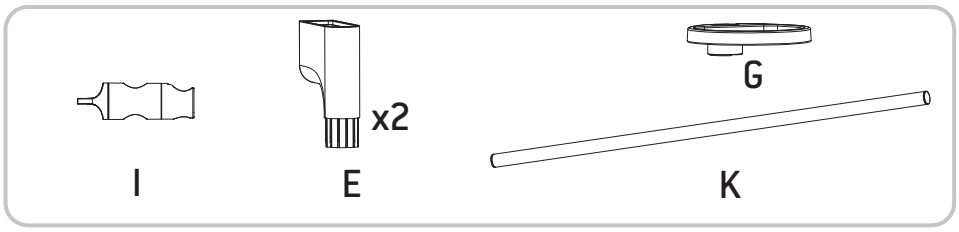
I
E
x2
G
K

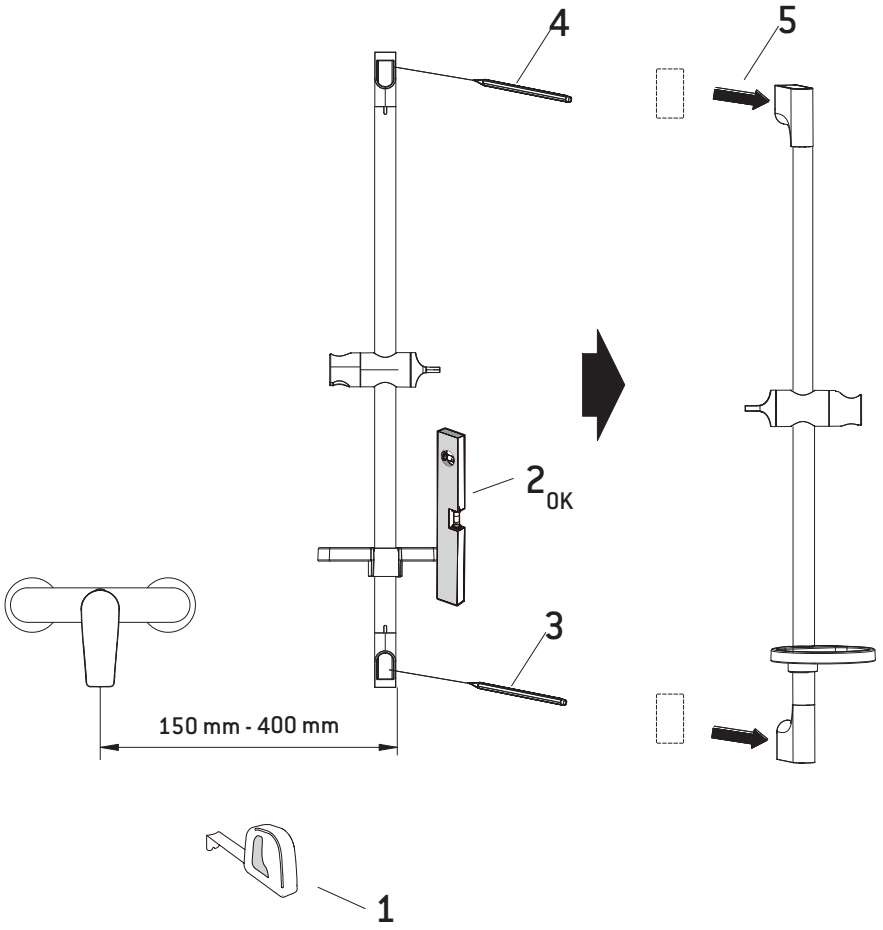
4
5
2
OK
3
150 mm - 400 mm
1

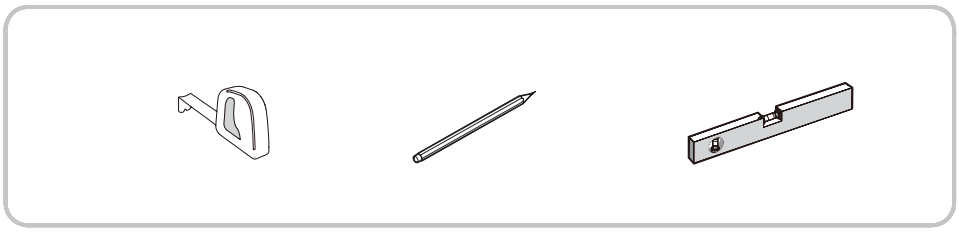

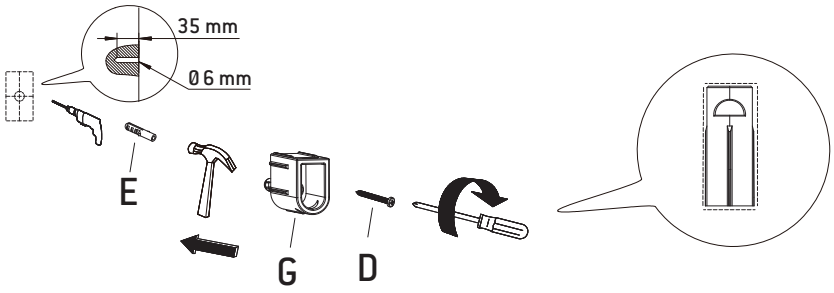
35 mm
Ø6 mm
E
G
D

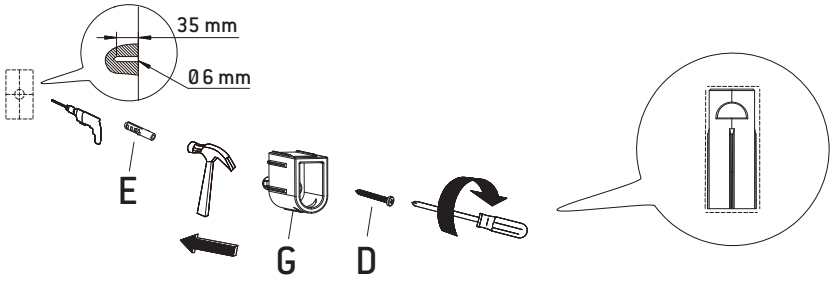
35 mm
Ø6 mm
E
G
D

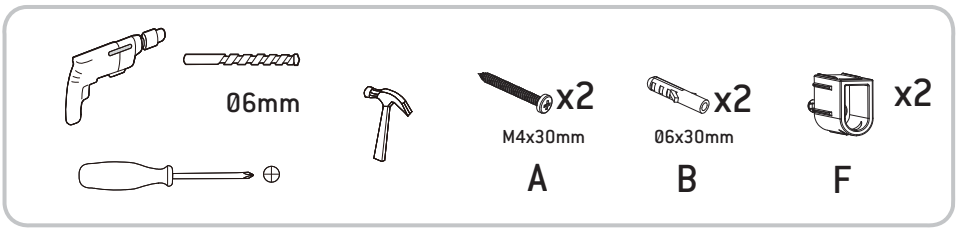
Ø6mm
x2
M4x30mm
A
x2
Ø6x30mm
B
x2
F

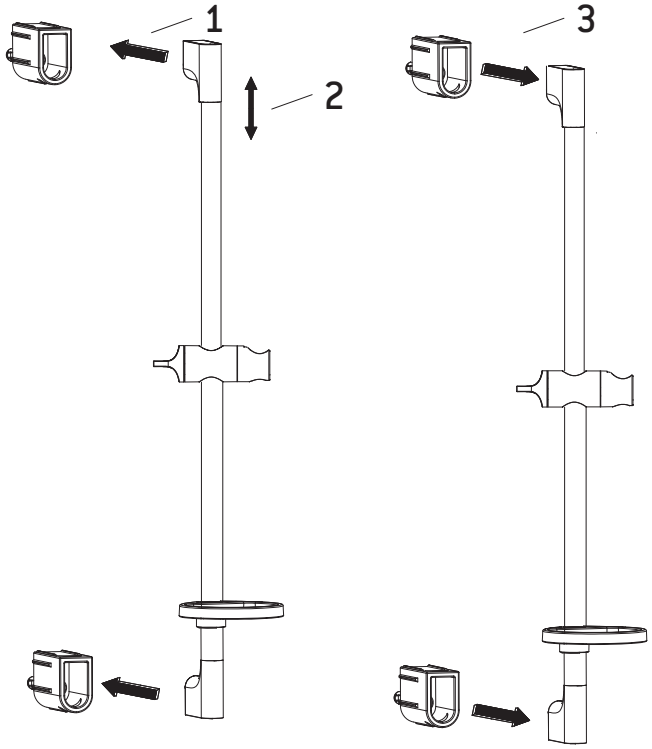
1
2
3

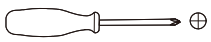

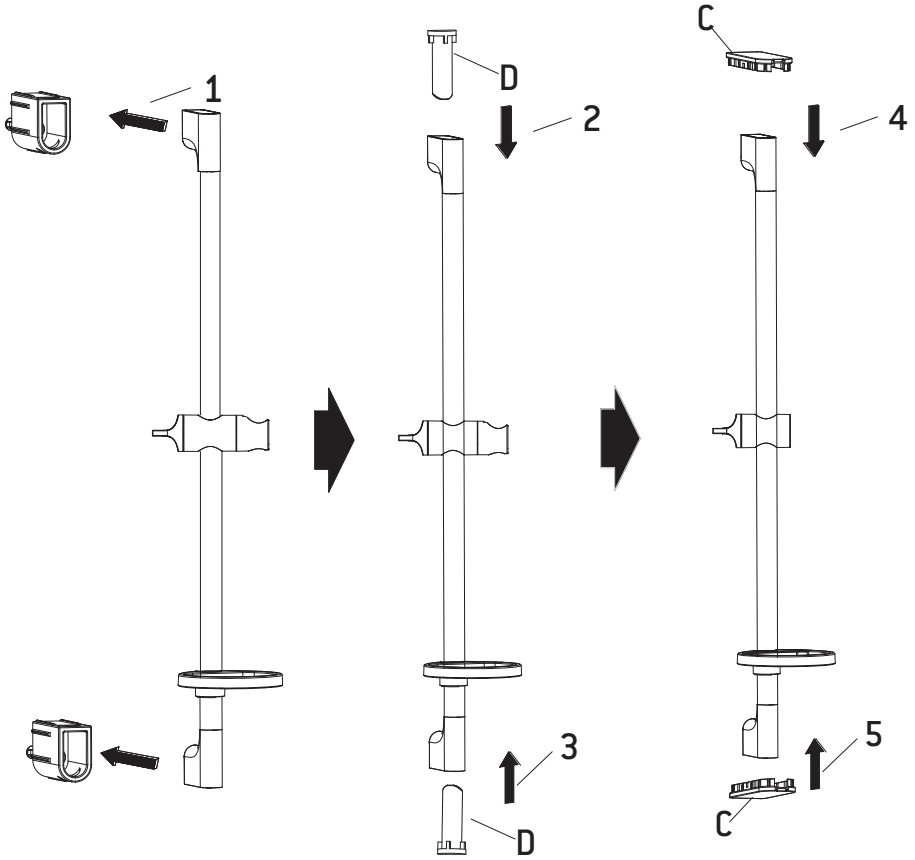
1
D
2
C
4
3
D
5
C

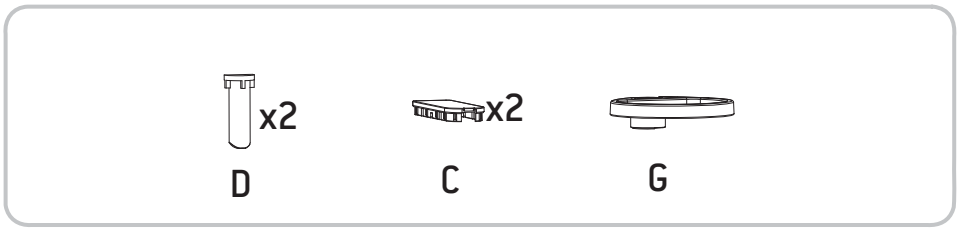
x2
D
x2
C
G

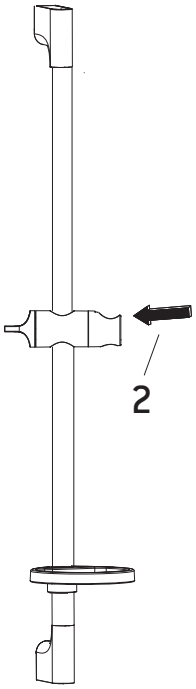

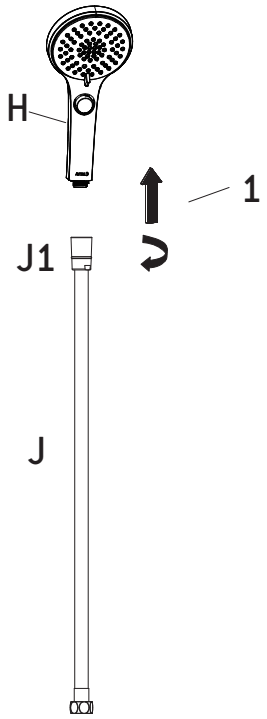

H

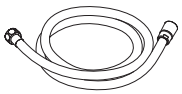

J

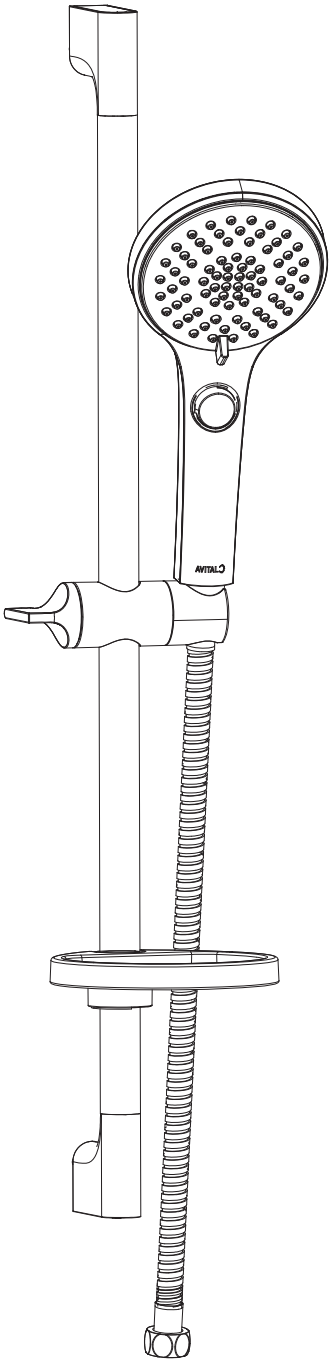
AVITAL