GROHE

ENJOY WATER®

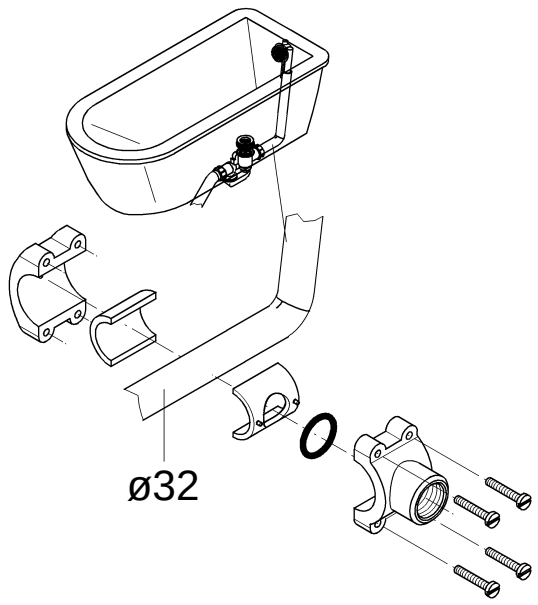

1a.

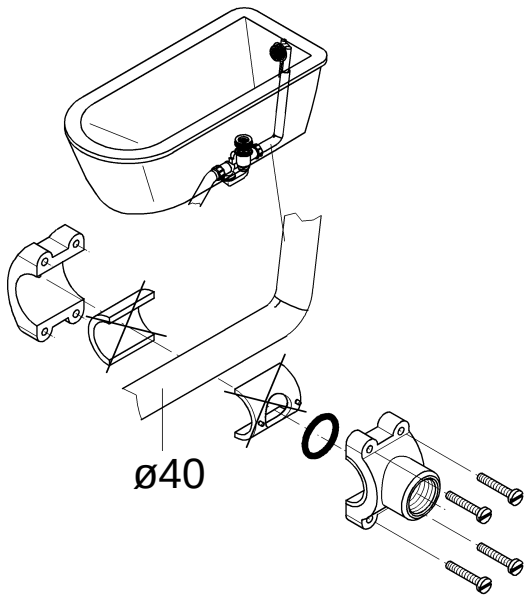

1b.

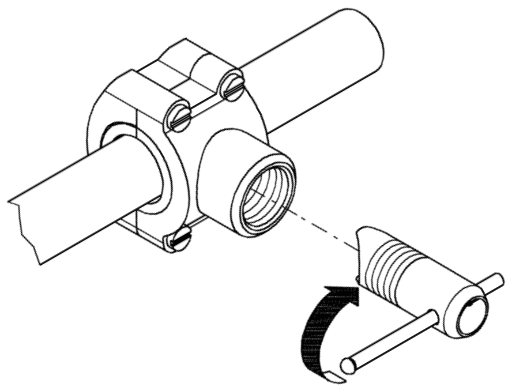

2.

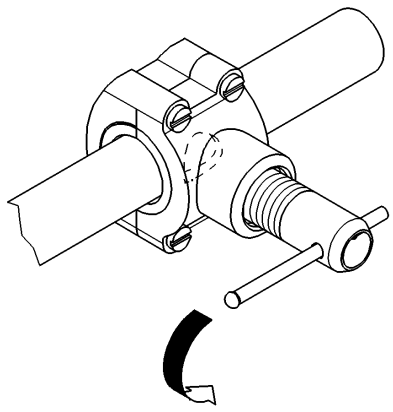

3.

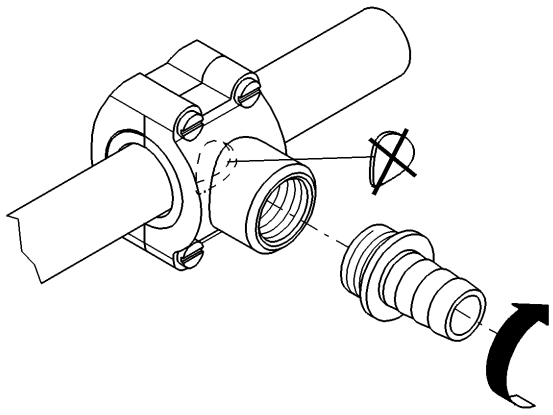

4.

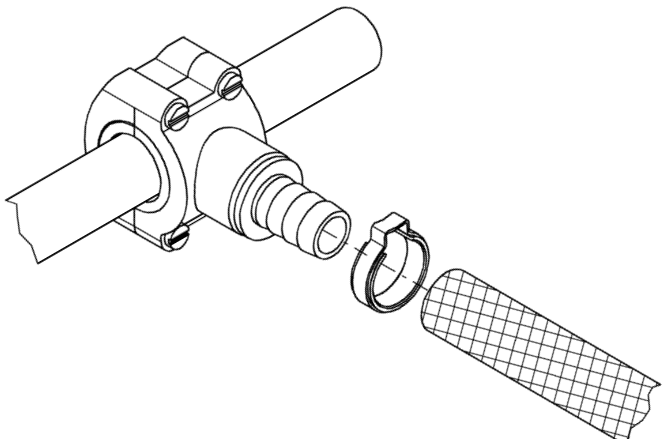

5.

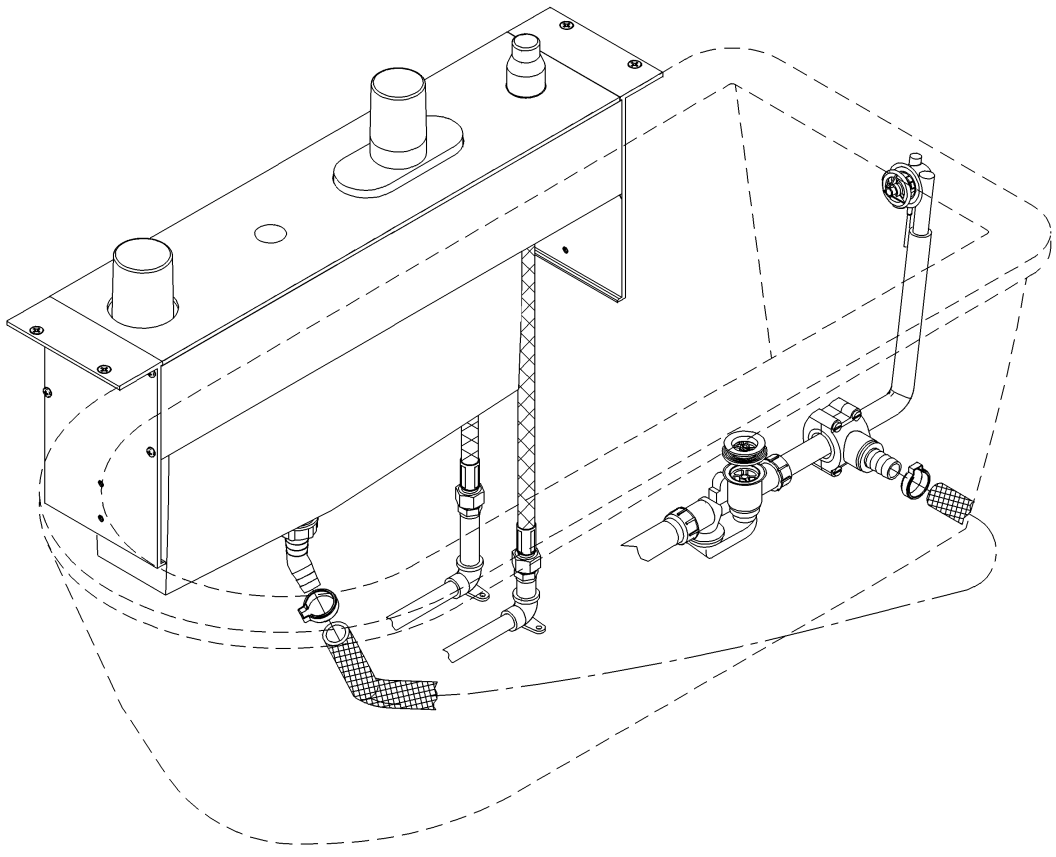

95.502.131/ÄM 30 230/08.07