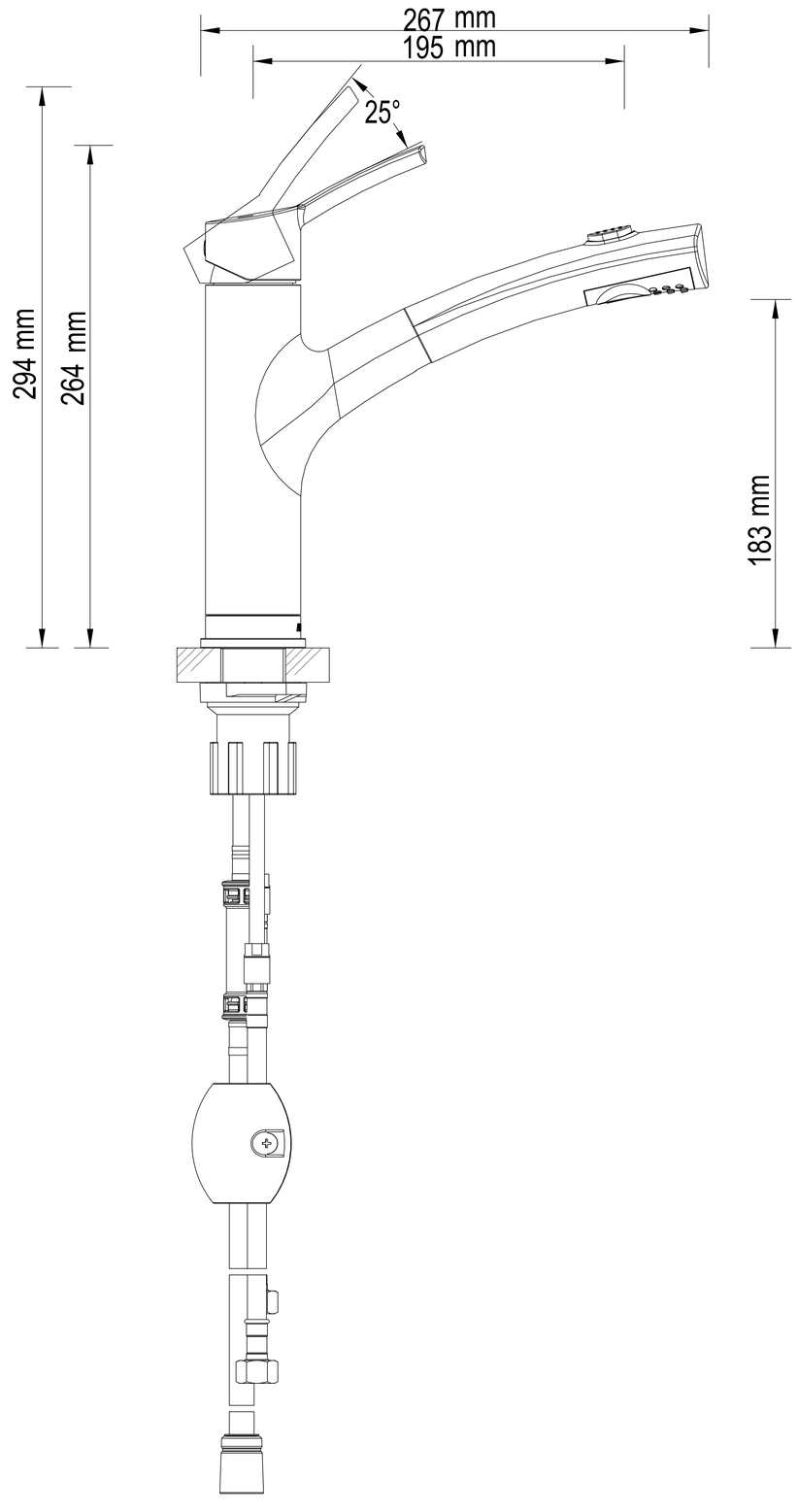
267 mm
195 mm
25°
294 mm
264 mm
183 mm

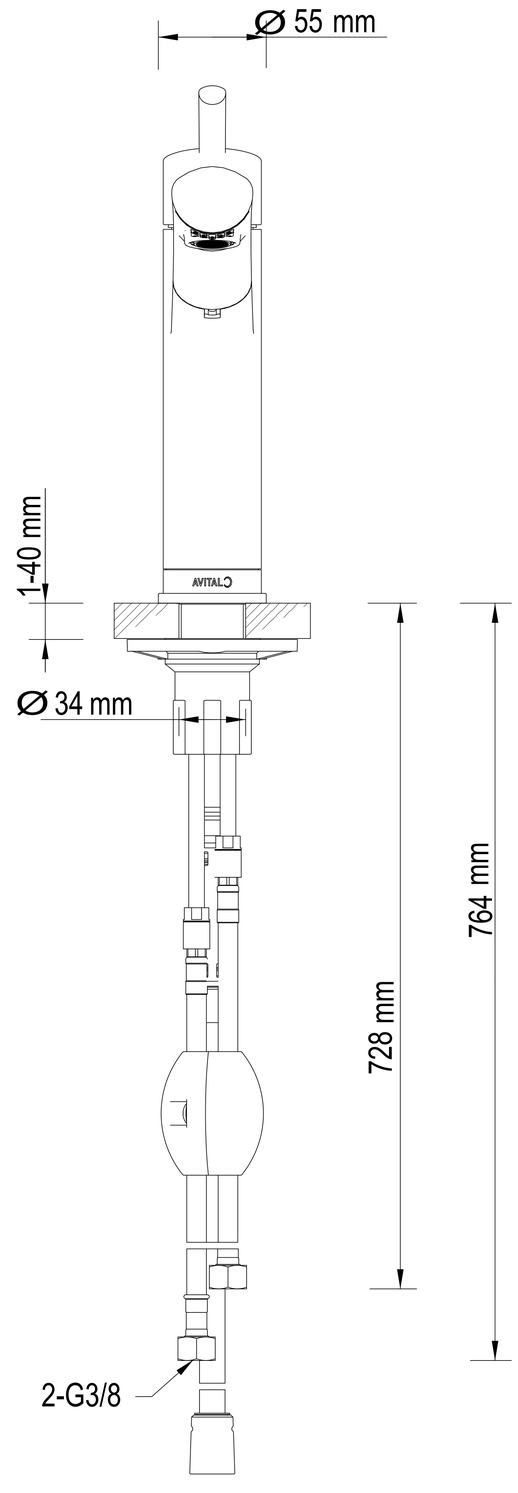
Ø 55 mm
1-40 mm
Ø 34 mm
728 mm
764 mm
2-G3/8